SPECIFICATION

MODEL	MA−50PH44			
FREQUENCY	50 Hz		60 Hz	
POLES	8 P	4 P	8 P	4 P
RATED LOAD	4000kg	2000kg	4000kg	2000kg
ROPE SPEED	45m/min	89 m/min	53m/min	106m/min
LENGTH OF WINDING	ϕ20×190m, ϕ20×80m×2			
MOTOR	OUT PUT	POLES	VOLTAGE	
	37kW	4/8P	200V	
ISO CLASS	M5			
WEIGHT	2150 kg			

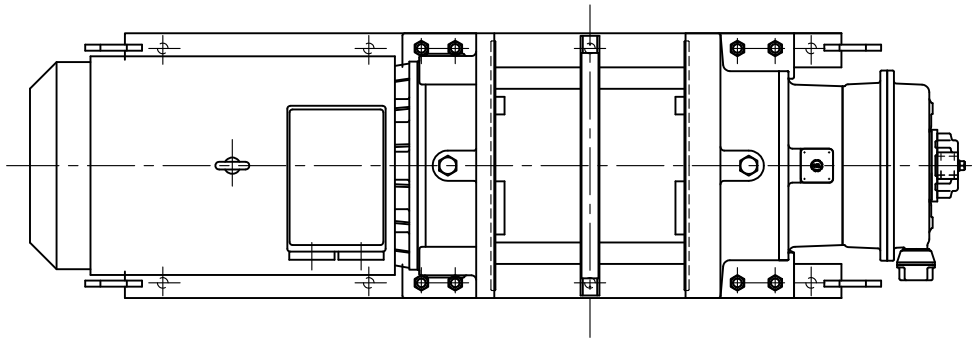

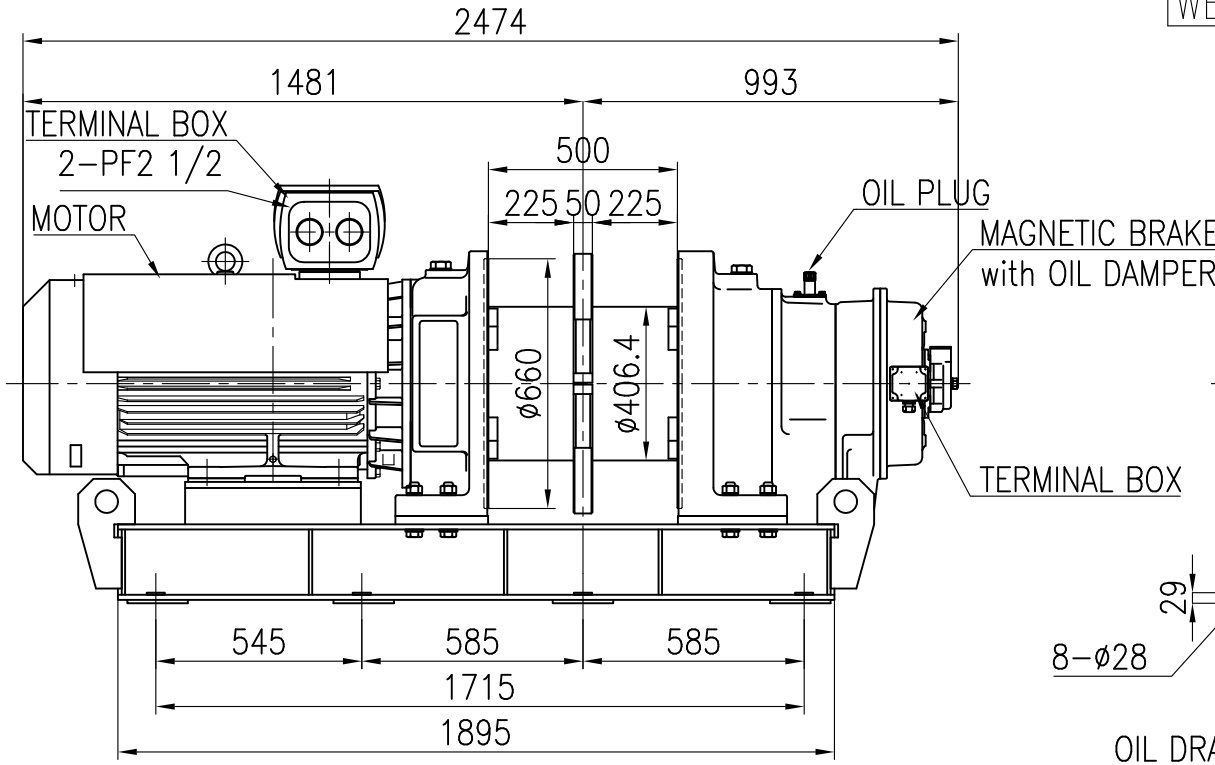

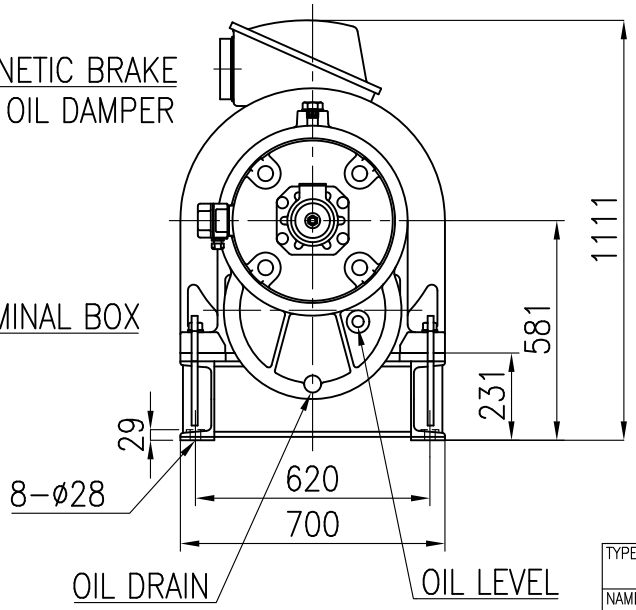

TYPE	MA−50PH44
NAME	OUTLINE
DRAWN No.	016350 △5

F0023

TOYOKOKEN K.K. JAPAN